Hanetkalem delwa2ty 3an el resource/time sharing. Bs abl ma nshoof example el FFT el fel ketab, 5alena el awel nbos 3la example tany. Assume enena 3andena PU 3obara 3an 4-input multiplier. Tab3an el 4-input multiplier da eventually ma3mool men gowa men 2-input multipliers, bs el mohem en howa bel nesbalna ka PU ma2fool 3leeh keda howa 4-input multiplier. W assume en el algorithm bta3na fih el 3 multiplication operations shown below:

$$o1 = b * c * d * e$$

$$o2 = a * k * l * m$$

$$o3 = n * p * q * r$$

Tab3an el direct implementation of this algorithm will be as shown below:

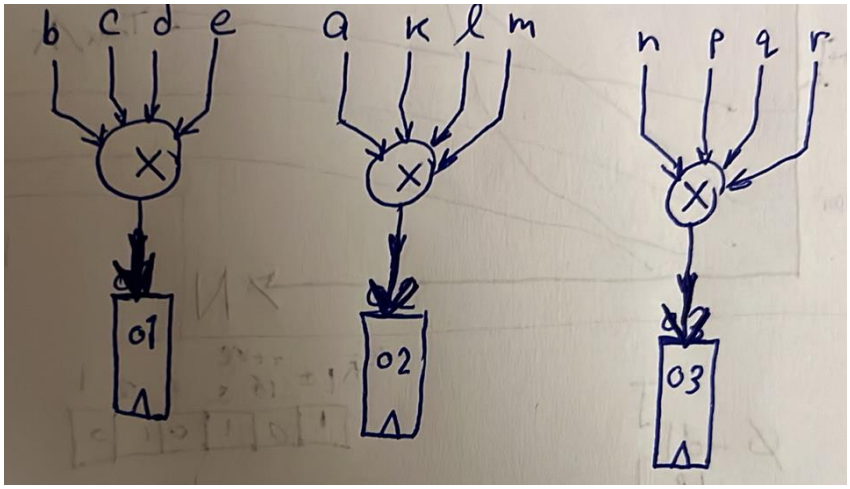

However, assume en el multiplier el wa7ed el throughput beta3o 300 MSps, y3ny el multiplier el wa7ed beya5od wa2t 3.3 ns 3ashan ye7seb el output beta3o, y3ny ana batala3 el vector el howa $\{o1, o2, o3\}$ da kol 3.3 ns. However, assume en el throughput el matloob men kol multiplier howa 100 MSps bs, y3ny matloob eny atala3 el vector el howa $\{o1, o2, o3\}$ da kol 10 ns. Fa keda el level of time sharing available is $m = \frac{10}{3.3} = 3$, y3ny momken asta5dem $\frac{1}{3} * no.of\ PUs\ used$, y3ny momken asta5dem multiplier wa7ed bs. Ne3melha ezay? as shown below:

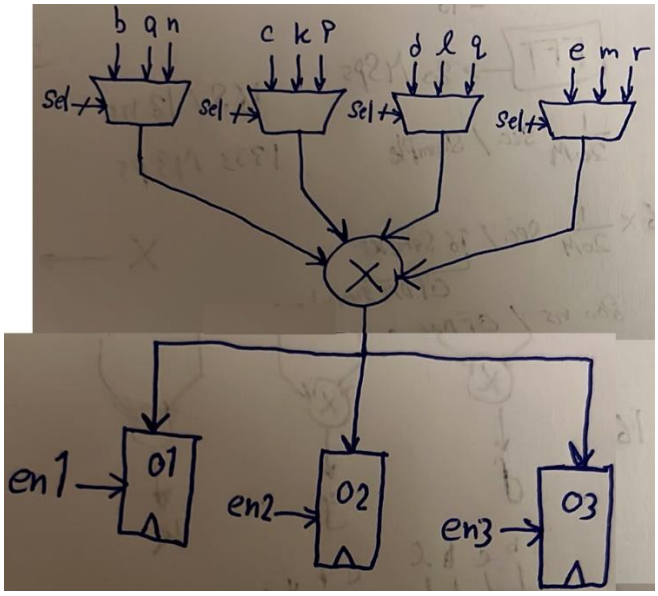

The selection lines of the muxes as well as the enable signals of the registers are provided by the controller. Notice en keda el controller matloob meno yeb2a shaghal be rate 300 MHz, b7ees ye provide el selection lines and enable signals kol 3.3 ns, b7ees el multiplier yefdal beytala3 output kol 3.3 ns bardo, fa nela2y eventually el vector el howa $\{o1, o2, o3\}$ da beyetla3 kol 10 ns.

However, this mux-based time-sharing method is applicable only for a small level of time sharing as in our case (3). What if the time sharing level became 50 for example (i.e. 50 PUs are replaced by only 1 PU)? el muxes de hatekbar awy keda w 3adad el registers at the output hayeb2o kotar awy. In this case, it is better to use a memory-based time-sharing method, which is using RAM blocks instead of these MUXes. We can apply this on our previous example as shown below. Notice that we trivially just replaced all MUXes and registers with memory banks, and now the controller has to provide these memories with an address signal (again, with 300 MHz).

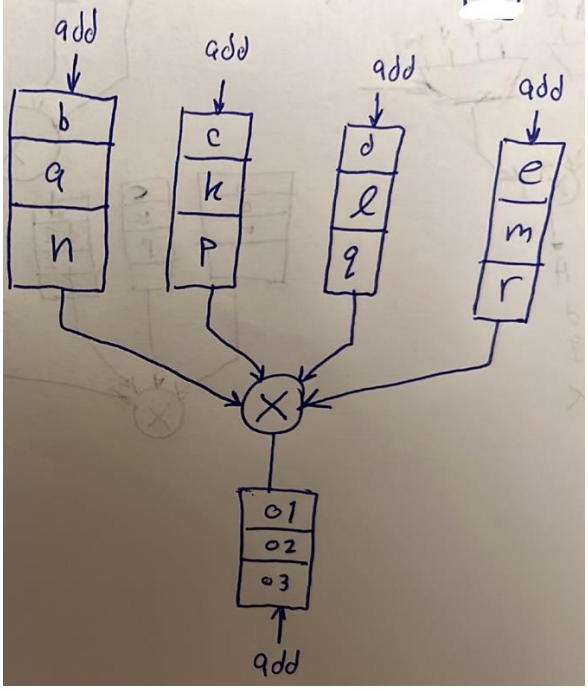

5aly balak en using banks of memories (i.e. not a single memory) da as-hal 7al w mafehosh waga3 demagh keteer ka tafkeer w design. However, 3adatan el nas bet7awel 3la 2ad ma te2dar enaha te2alel 3adad el memory banks el heya mesta5demaha la2en zy ma7na 3arfeen men course el memories kol memory beyeb2a gy m3aha el address decoder beta3ha wel sense amplifier wel 7warat de, fa area overhead kebera. Fa el e7na 3ayzeen ne3melo enena nesta5dem memory bank wa7ed bs lel inputs bta3t el multiplier da.

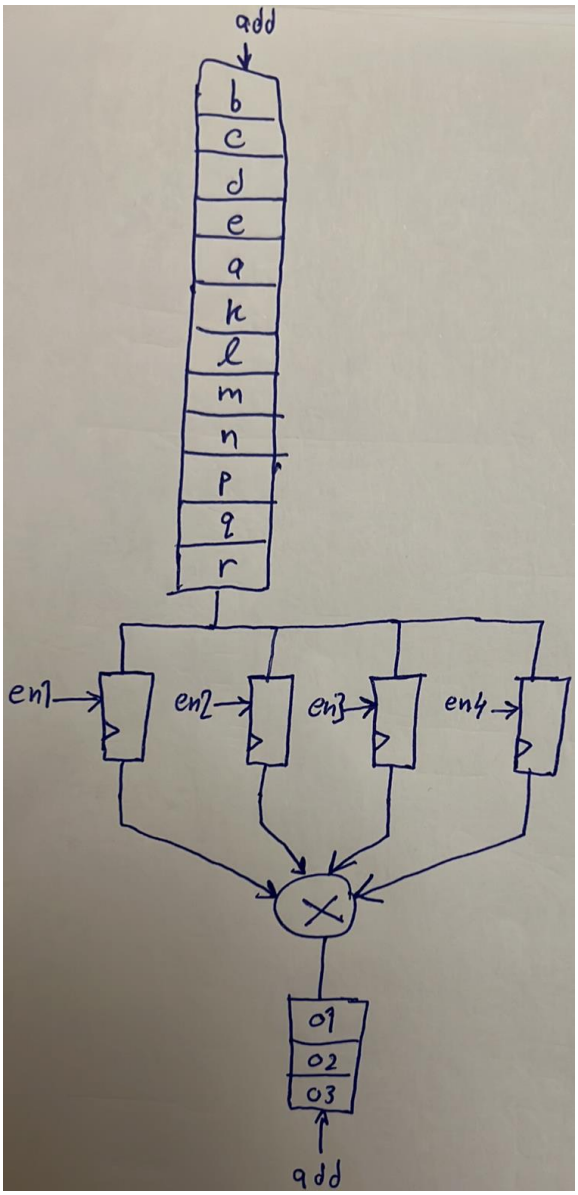

This time, the controller has to provide addresses for both memory banks as well as enable signals to all the registers.

Again, el multiplier 3ayez el 4 inputs bto3o yeb2o gahzeen kol 3.3 ns, fa keda el input memory bank me7tag ye get clocked by frequency 2ad eh (i.e. me7tageen el controller yeb3atlo address gedeed kol 2ad eh)? kol $\frac{3.3\ ns}{4}$, el howa y3ny me7tageen el input bank da ye get clocked be rate 300 MHz * 4 = 1.2 GHz. Tab wel registers wel output memory bank? la2 be rate 300 MHz 3ady.

3adatan el beye7sal kaman enena benraga3 el output le nafs el memory (ma7na mesh 3ayzeen nesta5dem memory banks keteera zy ma olna), fa el manzar sa3et-ha beyeb2a as shown below:

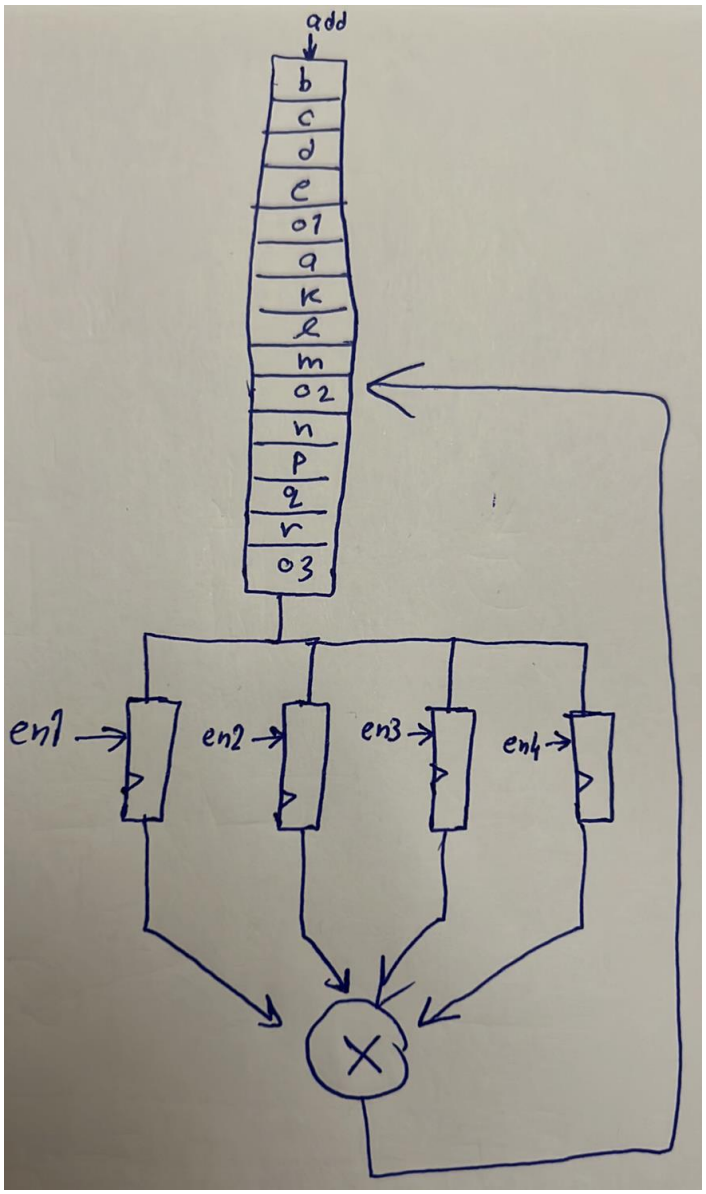

Keda el memory me7taga te get clocked be rate 2ad eh? hatla2y en enta keda ba2eet me7tag te access el memory 5 times fi moda 3.3 ns, y3ny el rate b2a 300 MHz * 5 = 1.5 GHz! wa5ed balak eh el beye7sal? el time-sharing dayman bey5alena ne access el memories be rates 3alya, w lama kaman nesta5dem memory banks a2al el rate da beye3la aktar w aktar. Tab efred nafs el case el fatet de bs b2a fih 10 PUs beya5do el inputs beto3hom men el memory de mesh PU wa7da bs? sa3et-ha el rate el l memory hat get clocked beh hayeb2a 300 MHz * 5 * 10 = 15 GHz! tab3an raqam 5orafy. Sa3et-ha eh el 7al? 5alas mafeesh 7al gheer enak terga3 te2asemhom le memory banks tany. Fa masalan lw enta fel design a5rak te clock el memory el m3ak be rate 5 GHz, fa keda fel case de motar enak testa5dem 3 memory banks w testa7mel el overhead bta3 el banks el ketera b2a.

Now, you can read the reference from section 8.9 to see a bigger example.